elevator.tv



OPEN FRAME **DISPLAYS**

Reliable displays for passenger information and branding

- WIDE — Ultra-wide Viewing Angle (178°)
- High Brightness
- Industrial Design
- 4:3 — Aspect Ratio (4:3)

FEATURES

Easy-to-Use, State-of-the-Art Content Management System

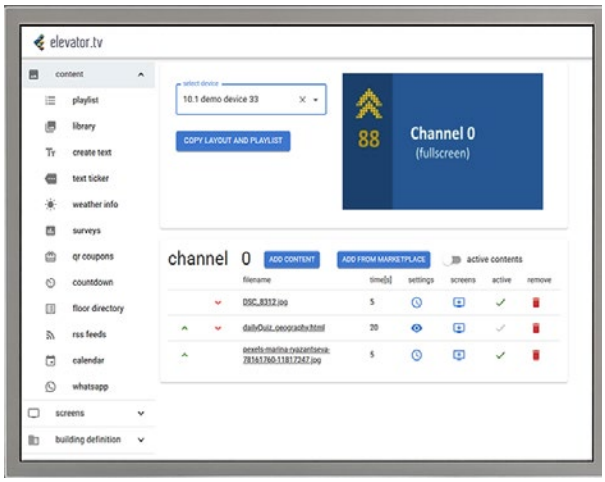

Our powerful Content Management System (CMS) makes managing your screen content effortless. Designed with **simplicity and performance** in mind, it supports all common file formats and includes advanced features like content scheduling, audit logs, and a multiuser interface with customizable access rights.

With an intuitive interface, our CMS works **seamlessly across cloud, on-premise, or offline setups** — whether through USB pen drives or our dedicated Bluetooth app. It's the perfect solution for reliable and flexible content delivery in any environment.



Highly Customizable Screen Design for Corporate Branding

Create stunning, brand-aligned screen layouts with our flexible design tools. Choose from **over 50 professionally crafted templates** available in both portrait and landscape modes, or build your own using our easy-to-use layout manager.

Enhance your screens with a variety of dynamic widgets such as weather updates, clocks, and floor directories. With full control over fonts, colors, and styling, you can perfectly match your company's visual identity — **ensuring every screen reflects your brand at its best**.



Advanced Marketing & Content Features

Boost engagement with a powerful suite of marketing tools built directly into our platform. Access a rich **Content Marketplace** offering local weather, news, and entertainment feeds to keep your screens fresh and relevant. Easily generate QR codes linked to campaigns, with tracking by screen location and detailed performance analytics. Our integrated **Coupon Management System** enables seamless distribution and redemption — no extra hardware required. Run interactive surveys directly on-screen with our Survey Management System, and deliver hyper-targeted content based on context, such as current weather or elevator direction.

High Security and Reliability

Designed for mission-critical environments, our solution combines **industrial-grade reliability with enterprise-level security**. We use only A-grade LCD panels with high brightness and wide viewing angles to ensure maximum visibility in any lighting condition.

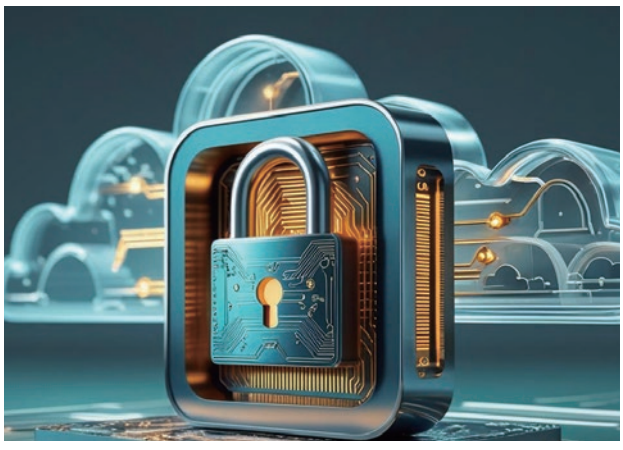

All hardware components are built to industrial standards, and our state-of-the-art security architecture includes optional two-factor authentication (2FA) for enhanced protection. With a cloud infrastructure offering over **99.99% availability**, remote supervision, and seamless software updates, your system remains secure, up-to-date, and dependable — wherever it's deployed.



OPEN FRAME DISPLAYS

SPECIFICATIONS

elevator.tv open frame displays deliver elevator communication that is clear, professional, and engaging. Passenger information, safety notices, and branded content are presented with sharp visuals and easy readability that capture attention instantly. Designed for seamless integration and built for dependable 24/7 operation, these displays ensure your messages are always delivered with impact — turning every elevator ride into an opportunity to inform, impress, and connect.

Display Panel

Product Model	LXO104	LXO121	LXO15	LXO17	LXO19
Size	**10.4"**	**12.1"**	**15"**	**17"**	**19"**
Aspect Ratio	4:3	4:3	4:3	5:4	5:4
Resolution (pixels)	1024 × 768	1024 × 768	1024 × 768	1280 × 1024	1280 × 1024
Viewing Angle (° H/V)	170° / 170°	178° / 178°	178° / 178°	178° / 178°	178° / 178°
Contrast Ratio	1000:1	1000:1	2500:1	1000:1	1000:1

Hardware

Processor	Quad-Core ARM Cortex-A55, up to 2.0 GHz
RAM	2 GB
Storage	32 GB
I/O Ports	2 × USB 3.0 1 × MicroSD slot 1 × RS-485 serial port (female)
Audio Output	3 W integrated speaker

Network

Wi-Fi	IEEE 802.11 b/g/n
Ethernet	10/100/1000 Mbps
Bluetooth	Bluetooth 4.0

General Information

Power Supply	AC 100–240 V, 50/60 Hz				
Operating Temperature	0–50 °C				
Operating Humidity	10–90% RH, non-condensing				
Housing	Silver Metal Case				
Certifications	CE, FCC, RoHS				
Net Weight	2.0 kg	2.0 kg	2.6 kg	3.0 kg	3.9 kg
Gross Weight	2.3 kg	2.5 kg	3.2 kg	3.6 kg	4.5 kg
Package (approx., cm)	32 × 7 × 32	34 × 11 × 30	42 × 11 × 35	46 × 11 × 36	48 × 11 × 45
Mounting	Horizontal or Vertical				

Specifications and dimensional data are subject to change without notice.

DIMENSIONS

10.4” Model | LXO104

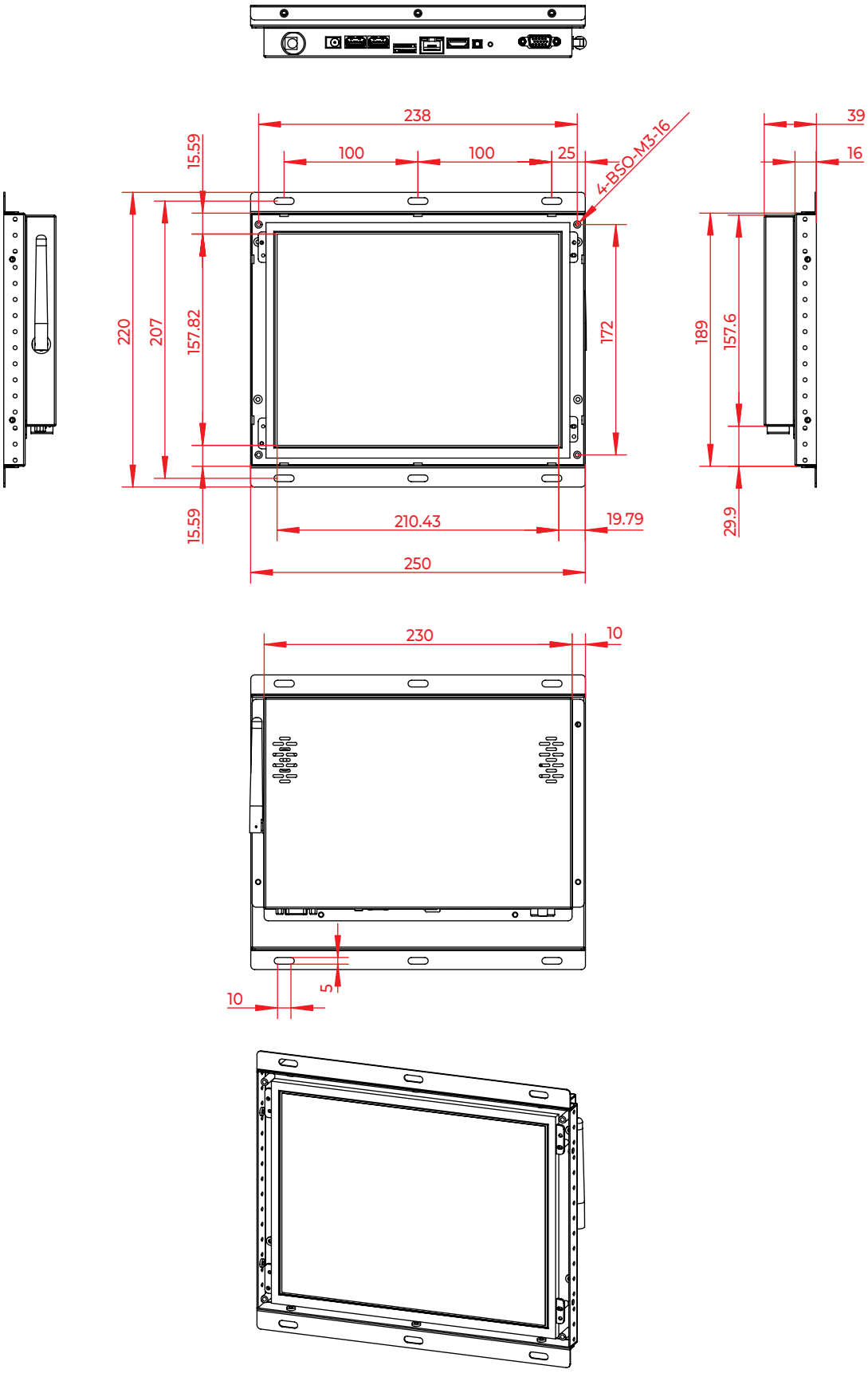

DIMENSIONS

12.1” Model | LXO121

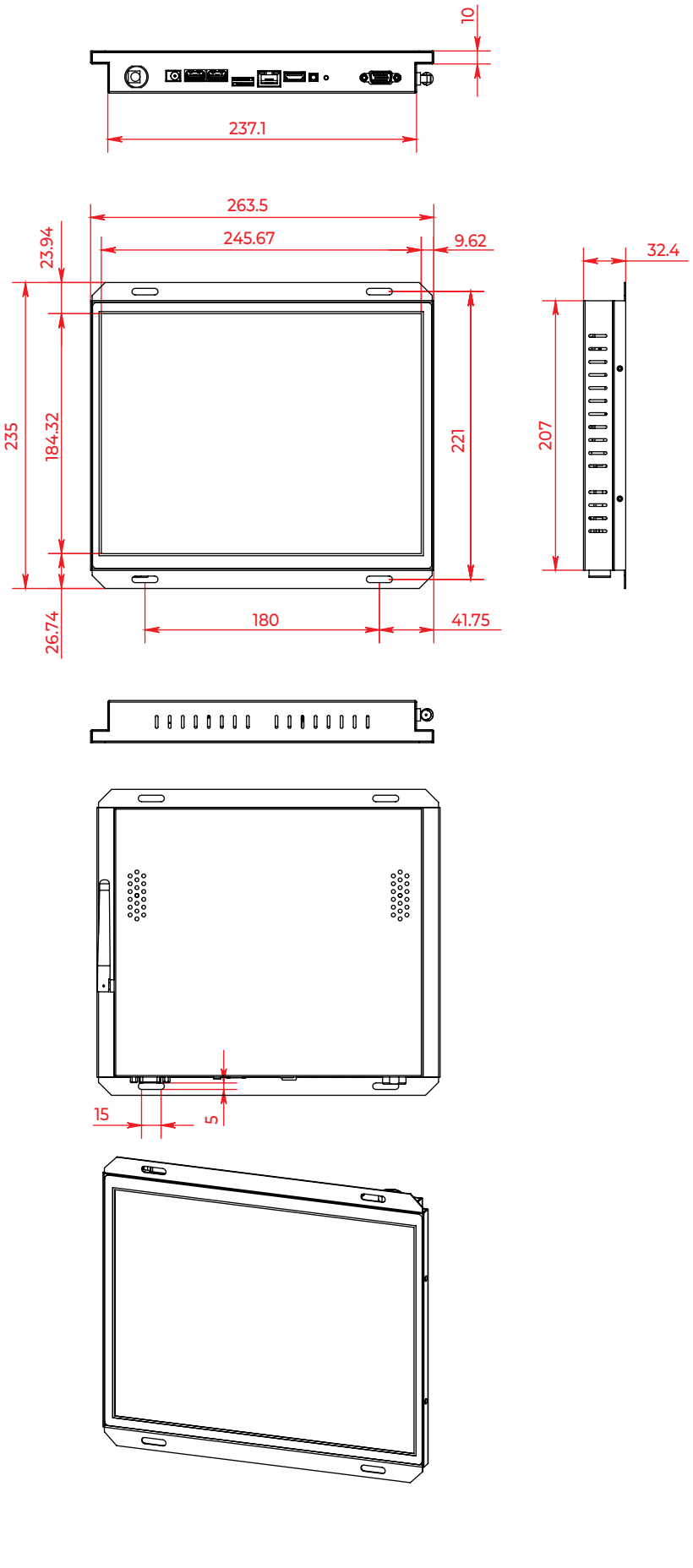

DIMENSIONS

15” Model | LX015

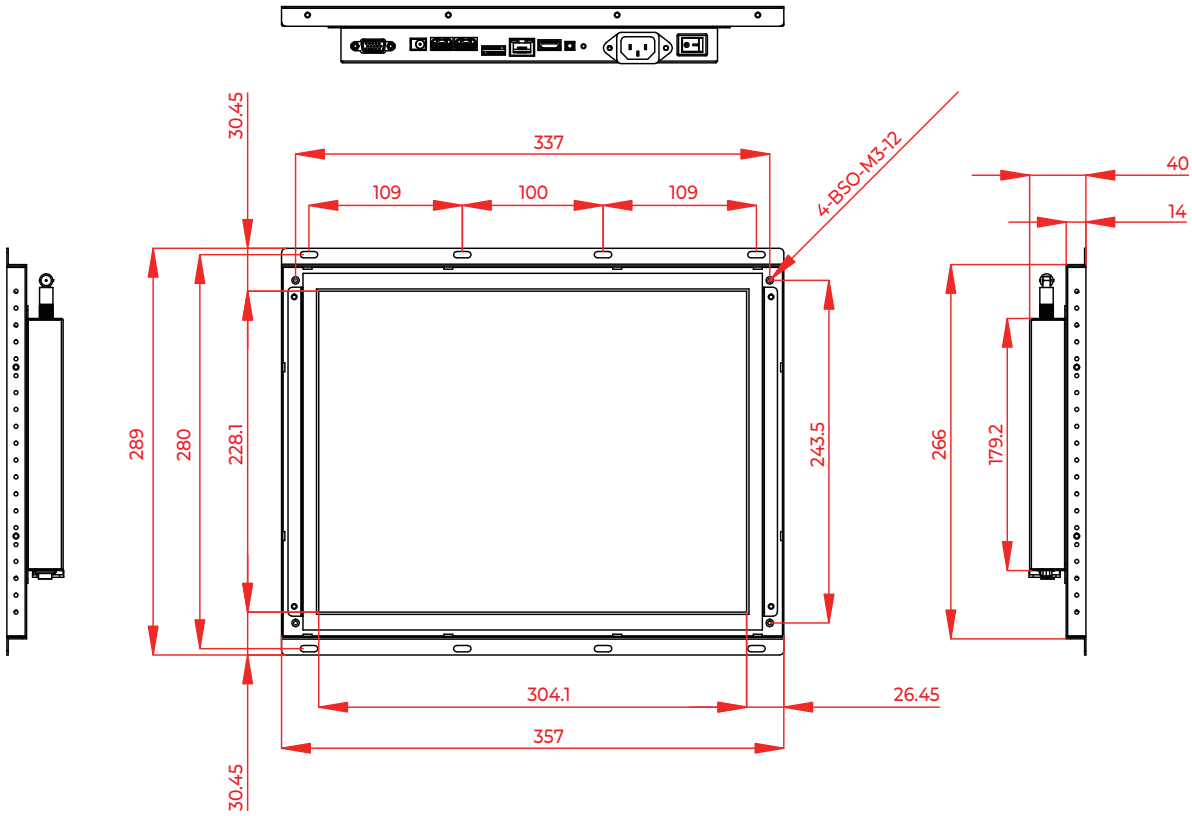

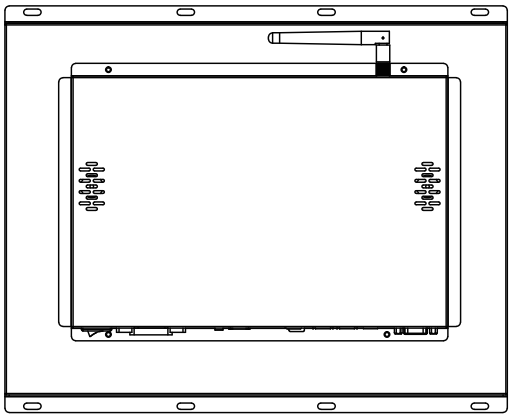

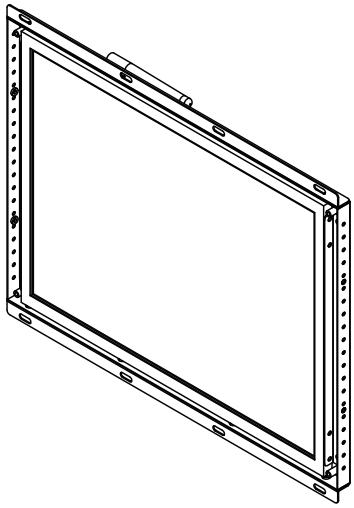

DIMENSIONS

17” Model | LX017

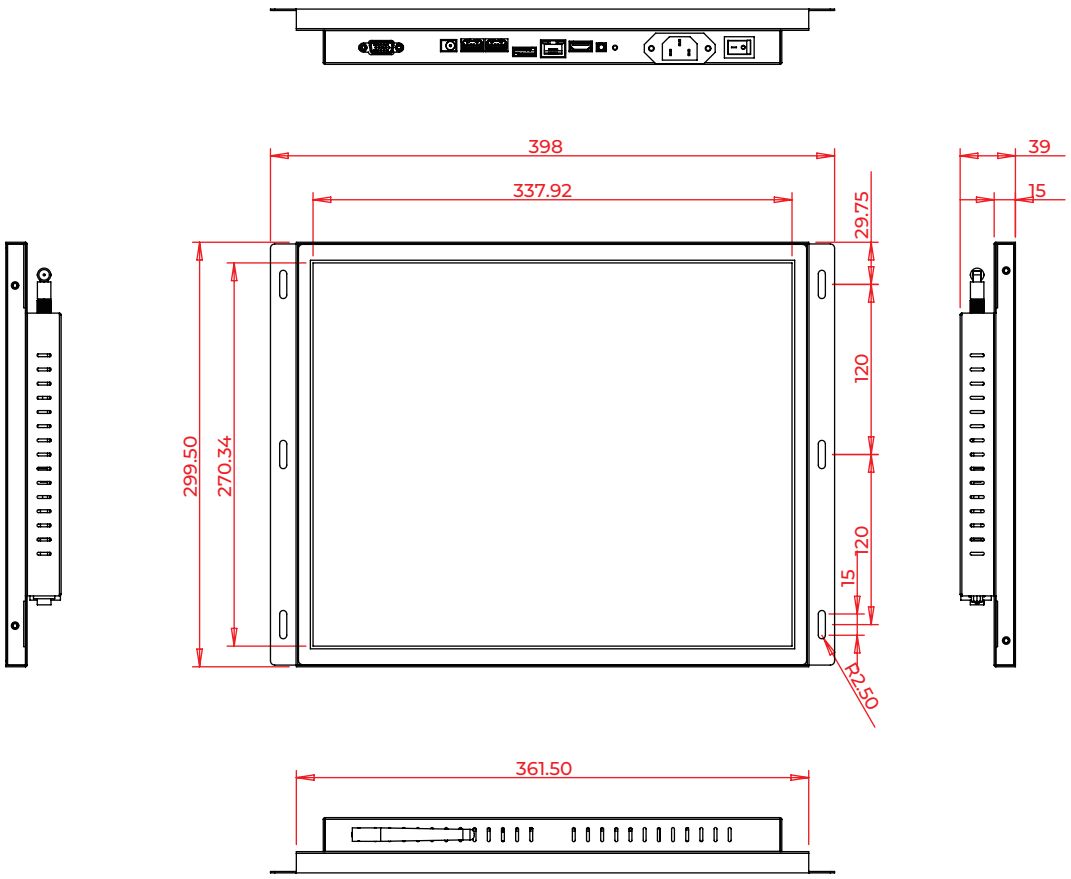

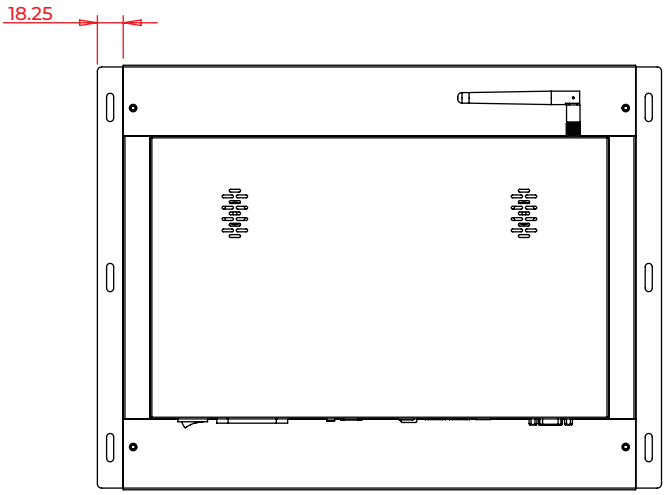

DIMENSIONS

19” Model | LXO19

