elevator.tv




# HIGH DEFINITION OPEN FRAME DISPLAYS

**Widescreen impact for modern elevator communication**

- Full HD Resolution
- High Brightness
- Industrial Design
- Aspect Ratio (16:9)

OPEN FRAME DISPLAYS

# FEATURES

## Easy-to-Use, State-of-the-Art Content Management System

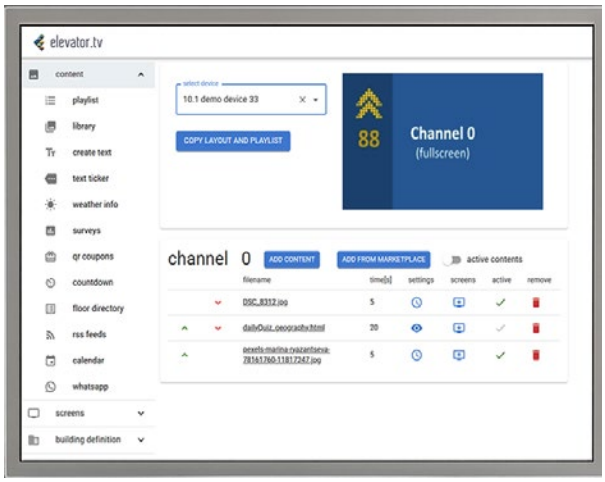


Our powerful Content Management System (CMS) makes managing your screen content effortless. Designed with **simplicity and performance** in mind, it supports all common file formats and includes advanced features like content scheduling, audit logs, and a multiuser interface with customizable access rights.

With an intuitive interface, our CMS works **seamlessly across cloud, on-premise, or offline setups** — whether through USB pen drives or our dedicated Bluetooth app. It's the perfect solution for reliable and flexible content delivery in any environment.




## Highly Customizable Screen Design for Corporate Branding

Create stunning, brand-aligned screen layouts with our flexible design tools. Choose from **over 50 professionally crafted templates** available in both portrait and landscape modes, or build your own using our easy-to-use layout manager.

Enhance your screens with a variety of dynamic widgets such as weather updates, clocks, and floor directories. With full control over fonts, colors, and styling, you can perfectly match your company's visual identity — **ensuring every screen reflects your brand at its best**.

# FEATURES




## Advanced Marketing & Content Features

Boost engagement with a powerful suite of marketing tools built directly into our platform. Access a rich **Content Marketplace** offering local weather, news, and entertainment feeds to keep your screens fresh and relevant. Easily generate QR codes linked to campaigns, with tracking by screen location and detailed performance analytics. Our integrated **Coupon Management System** enables seamless distribution and redemption — no extra hardware required. Run interactive surveys directly on-screen with our Survey Management System, and deliver hyper-targeted content based on context, such as current weather or elevator direction.

## High Security and Reliability

Designed for mission-critical environments, our solution combines **industrial-grade reliability with enterprise-level security**. We use only A-grade LCD panels with high brightness and wide viewing angles to ensure maximum visibility in any lighting condition.

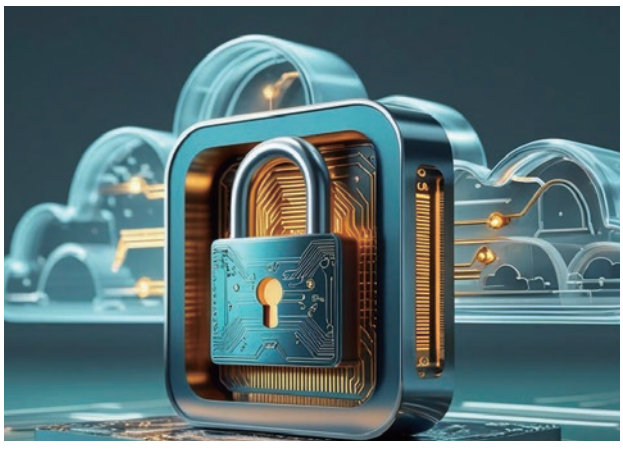

All hardware components are built to industrial standards, and our state-of-the-art security architecture includes optional two-factor authentication (2FA) for enhanced protection. With a cloud infrastructure offering over **99.99% availability**, remote supervision, and seamless software updates, your system remains secure, up-to-date, and dependable — wherever it's deployed.

OPEN FRAME DISPLAYS

# SPECIFICATIONS

elevator.tv high definition open frame displays deliver vivid detail and exceptional clarity, ensuring every message is seen and remembered. Ideal for passenger information, safety notices, or promotional media, they keep communication sharp and engaging. With seamless integration and reliable continuous operation, they transform elevator communication into a modern experience that informs, impresses, and adds value to every ride.

## Display Panel

| Product Model | LXO101 | LXO133 | LXO156 | LXO185 | LXO215 | LXO238 |
|---|---|---|---|---|---|---|
| Size | **10.1"** | **13.3"** | **15.6"** | **18.5"** | **21.5"** | **23.8"** |
| Aspect Ratio | 16:10 | 16:9 | 16:9 | 16:9 | 16:9 | 16:9 |
| Resolution (pixels) | 1280 × 1800 | 1920 × 1080 | 1920 × 1080 | 1920 × 1080 | 1920 × 1080 | 1920 × 1080 |
| Viewing Angle (° H/V) | 170° / 170° | 178° / 178° | 178° / 178° | 178° / 178° | 178° / 178° | 178° / 178° |
| Contrast Ratio | 800:1 | 1200:1 | 1200:1 | 1000:1 | 1000:1 | 1000:1 |

## Hardware

| | |
|---|---|
| Processor | Quad-Core ARM Cortex-A55, up to 2.0 GHz |
| RAM | 2 GB |
| Storage | 32 GB |
| I/O Ports | 2 × USB 3.0<br>1 × MicroSD slot<br>1 × RS-485 serial port (female) |
| Audio Output | 2 × 3 W integrated speakers |

## Network

| | |
|---|---|
| Wi-Fi | IEEE 802.11 b/g/n |
| Ethernet | 10/100/1000 Mbps |
| Bluetooth | Bluetooth 4.0 |

## General Information

| | | | | | | |
|---|---|---|---|---|---|---|
| Power Supply | AC 100–240 V, 50/60 Hz | | | | | |
| Operating Temperature | 0–50 °C | | | | | |
| Operating Humidity | 10–90% RH, non-condensing | | | | | |
| Housing | Silver Metal Case | | | | | |
| Certifications | CE, FCC, RoHS | | | | | |
| Net Weight | 1.9 kg | 2.3 kg | 2.6 kg | 3.2 kg | 4.3 kg | 4.6 kg |
| Gross Weight | 2.4 kg | 2.8 kg | 3.2 kg | 3.8 kg | 4.9 kg | 5.3 kg |
| Package (approx., cm) | 30 × 11 × 25 | 40 × 11 × 25 | 45 × 10 × 28 | 56 × 12 × 34 | 55 × 10 × 39 | 64 × 10 × 38 |
| Mounting | Horizontal or Vertical | | | | | |

Specifications and dimensional data are subject to change without notice.

# DIMENSIONS

## 10.1” Model | LXO101

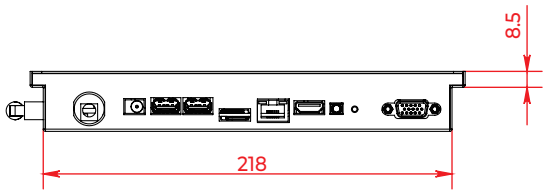


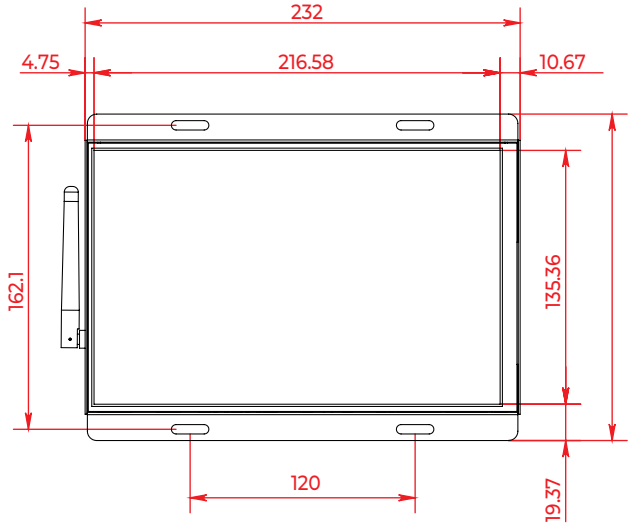


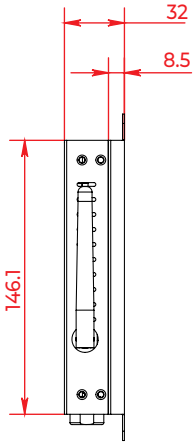




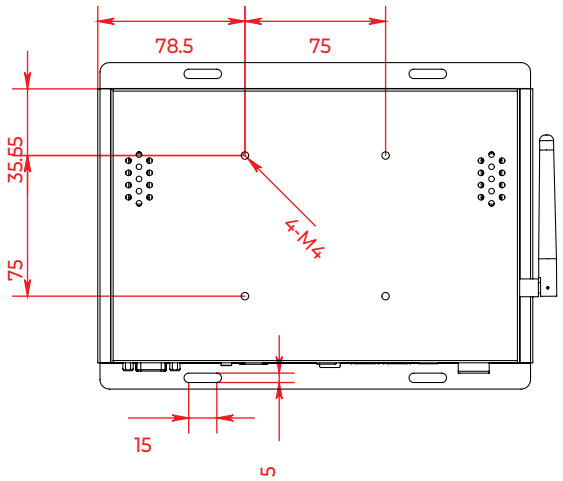


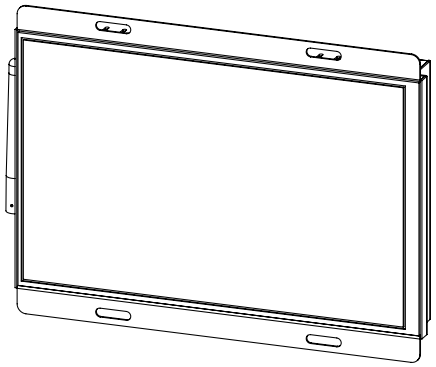

# DIMENSIONS

13.3” Model | LXO133

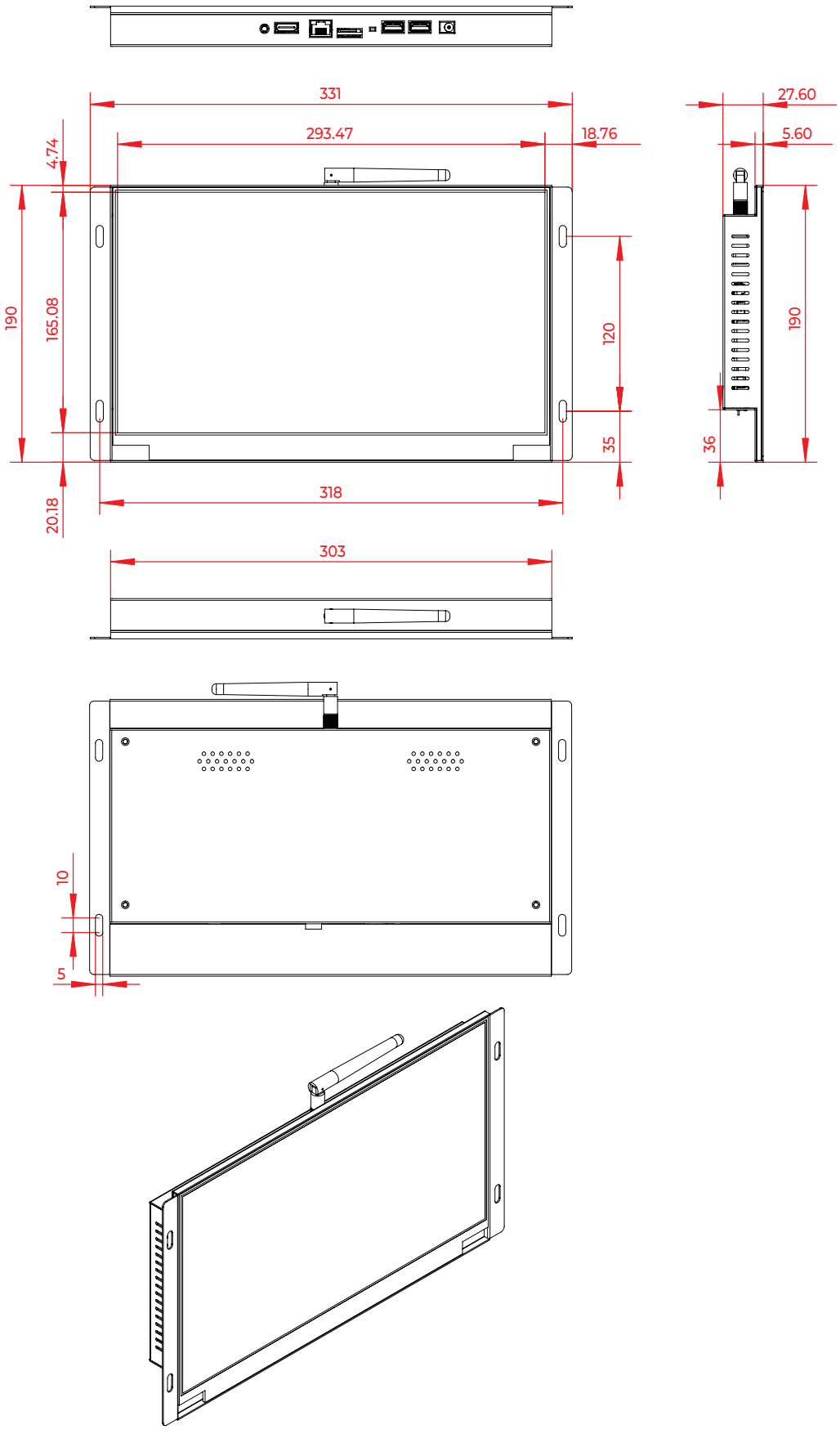

# DIMENSIONS

15.6” Model | LXO156

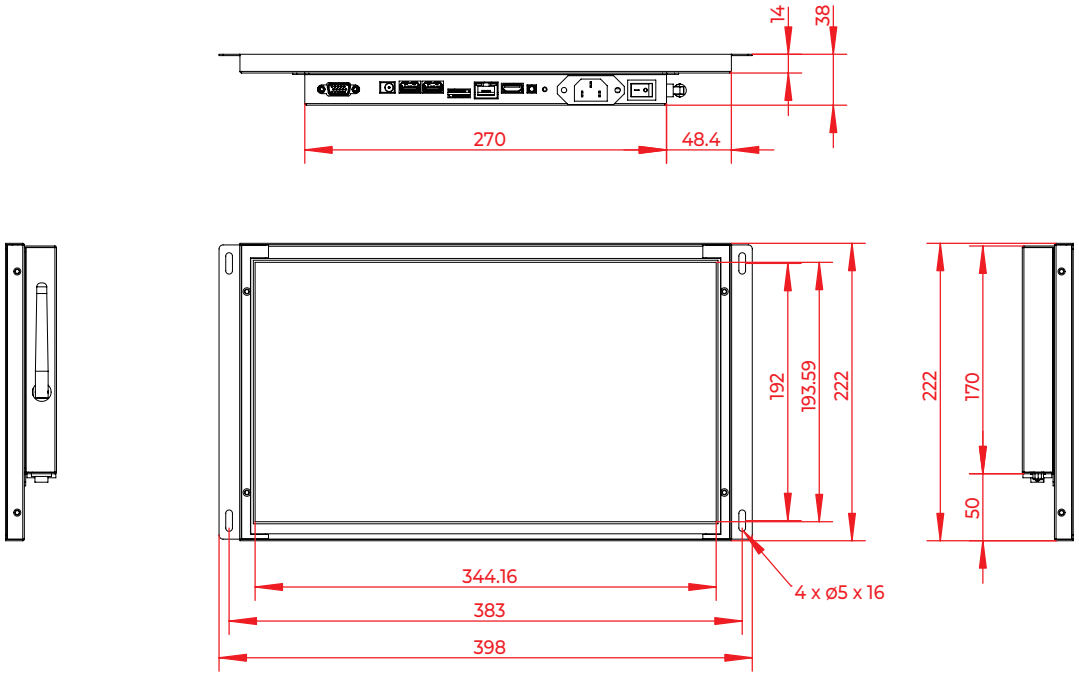


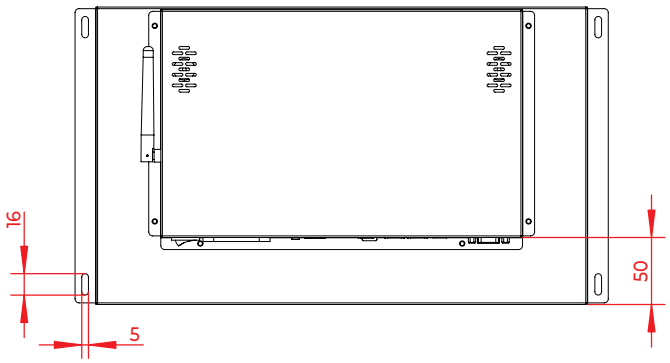


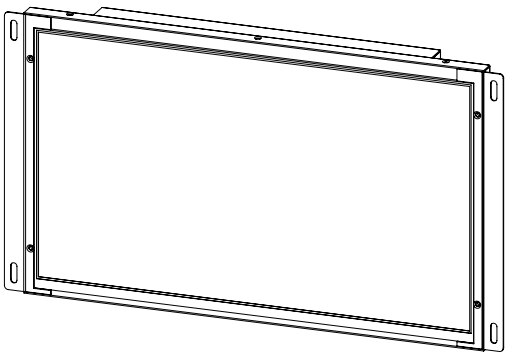

# DIMENSIONS

## 18.5” Model | LXO185

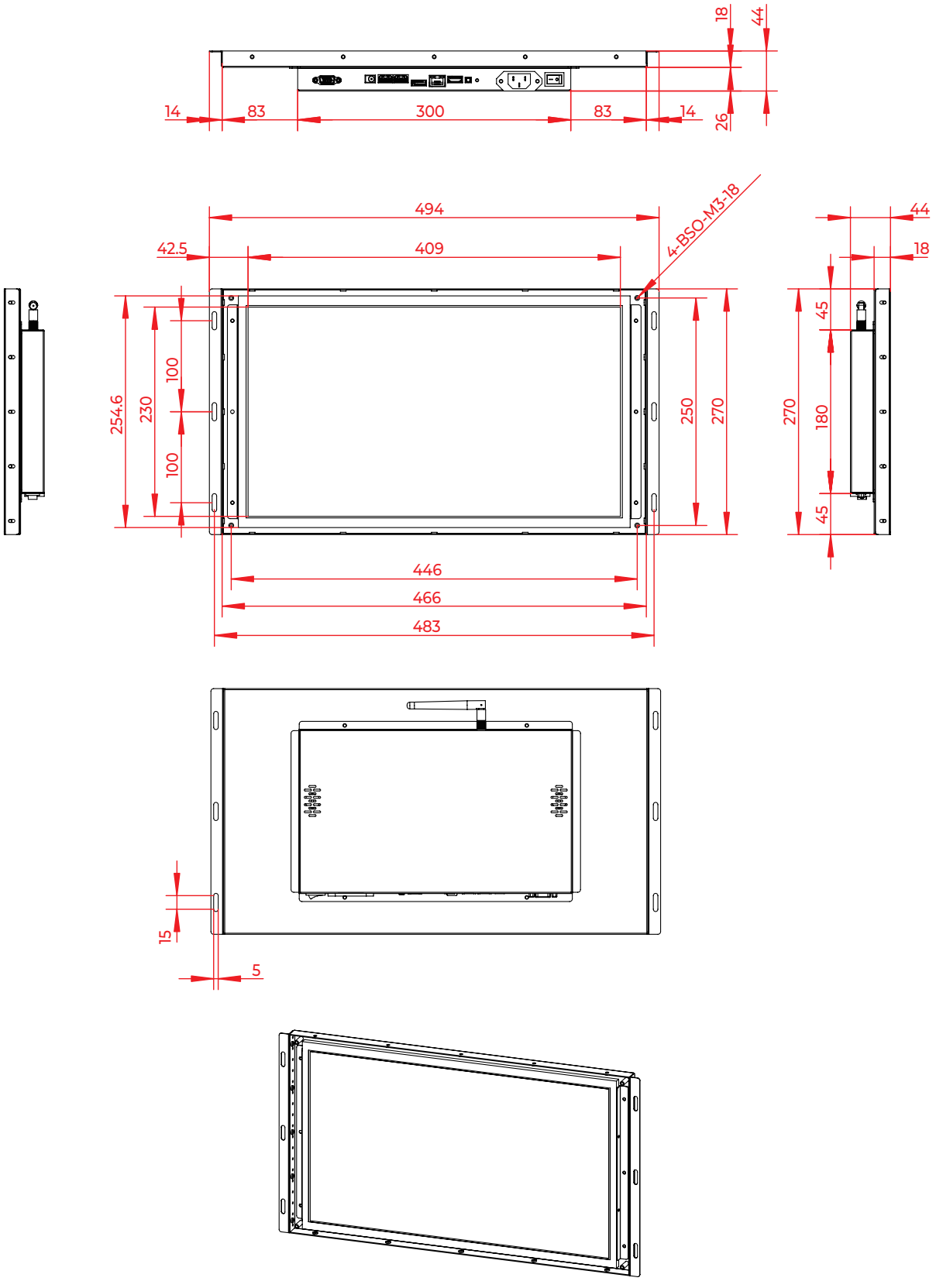

# DIMENSIONS

21.5” Model | LXO215

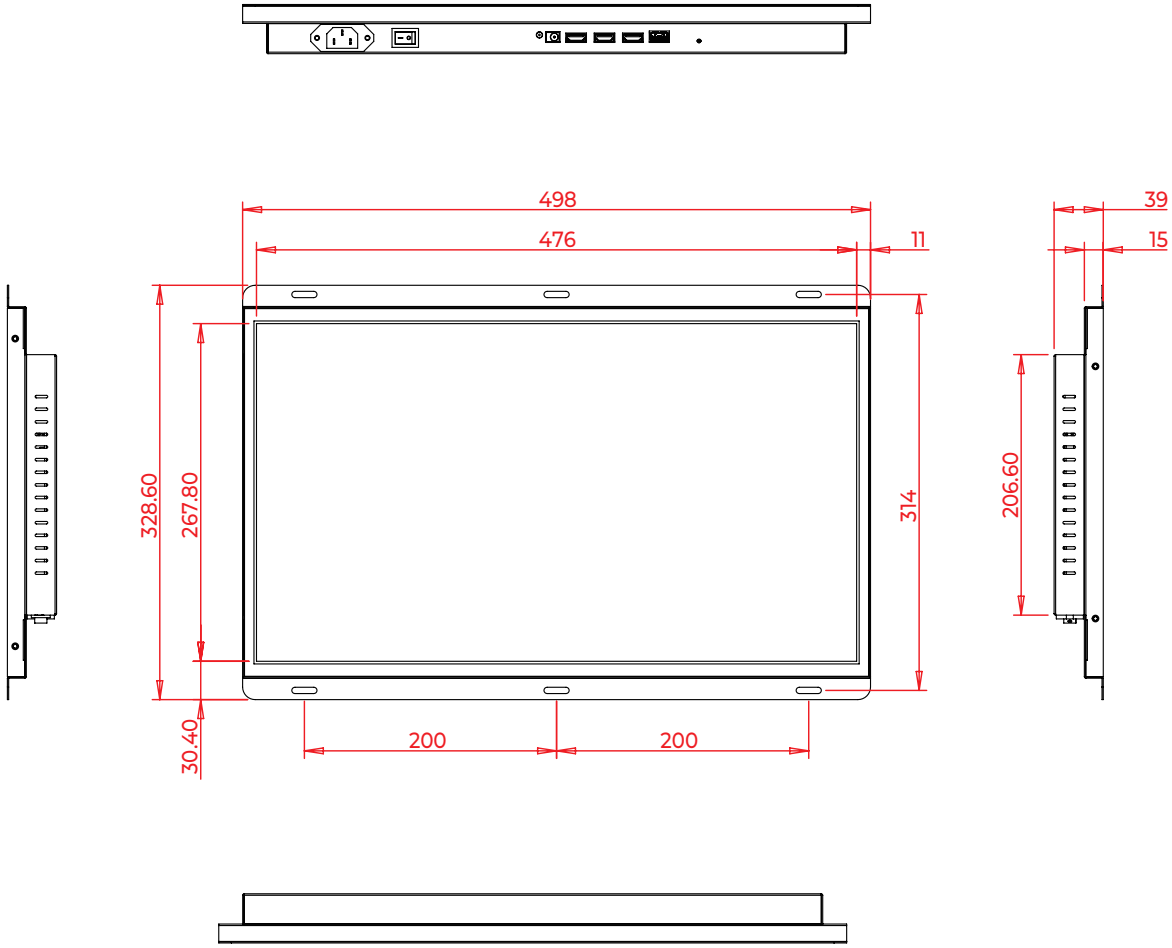


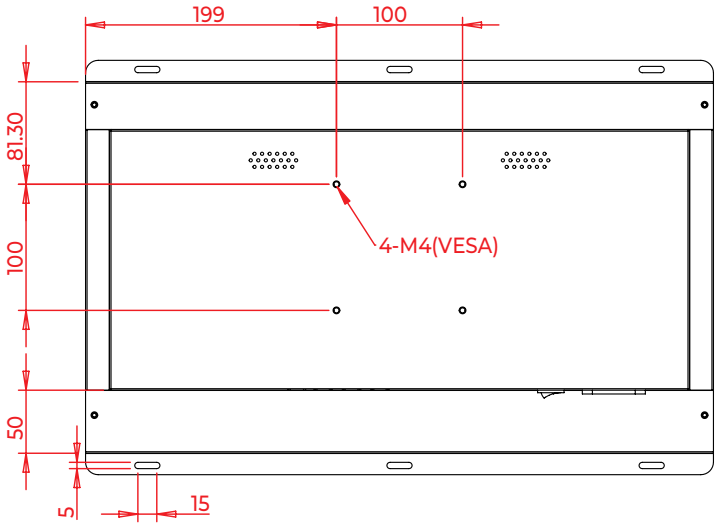

# DIMENSIONS

23.8” Model | LXO238

